World-class products, Made in India

RenewSys®
let there be light

Multi Mono **Specialised**

DESERV®

*Module images for representation purpose only

Solar PV Module
DESERV Prime & X-Prime

Prime 270 Wp - 285 Wp: 63 V
X-Prime 320 Wp - 345 Wp: 76 V

The ideal PV Module for all applications that use the highest quality of PV Cells, in-house Encapsulants, and Backsheets.

Prime and X-Prime are specially designed high voltage PV Modules with Multi Crystalline Silicon Cells.

SAFE

- IP67 Junction box
- 10 years of product warranty
- 25 Years of limited power output warranty
- 1000 Vdc

RELIABLE

- Extreme weather resilience
- Windspeed - 2400 Pa, Snowload - 5400 Pa
- Highly reliable anti-reflective coated glass

HIGH PERFORMANCE

- PID resistant
- Superlative performance in low light
- High power density
- Positive power tolerance

Ideal for:

Residential Commercial Utility Off-grid

Certifications:

- IEC Compliant
- Independently audited by SOLARBUYER
- IMS Certified Company - ISO 9001: 2015 & OHSAS 45001: 2018
- EMS - ISO 14001: 2015

CE Independently Audited by SOLARBUYER

RenewSys is the first integrated manufacturer of Solar PV Modules and its key components- Encapsulants (EVA and POE), Backsheets and Solar PV Cells. We have a global presence with offices in India, Mauritius, Nigeria, South Africa, Singapore, UAE, China, representatives in Brazil, Europe, USA, Mexico, and an evolving distributor network.

Corporate Office
Unit No. 607, 6th Floor, Trade Center, Bandra-Kurla Complex, Bandra East, Mumbai - 400 051, Maharashtra, India

Factory
Plot No.6, Survey # 114/P, Srinagar Village, Maheshwaram Mandal, Dist - Rangareddy, Hyderabad - 501 359, Telangana, India

- Please refer to the installation manual for detailed information.

RenewSys®
let there be light

DESERV®

Performance under standard test conditions (1000w/m², AM 1.5, 25 °C)

	Prime				X-Prime					
DESERV (Wp)	**270**	**275**	**280**	**285**	**320**	**325**	**330**	**335**	**340**	**345**
Rated power (Pmax), Wp	270	275	280	285	320	325	330	335	340	345
Max. power voltage (Vmp), V	63.28	63.44	63.55	63.64	76.13	76.52	76.81	76.92	77.14	77.25
Max. power current (Imp), A	04.28	04.34	04.41	04.48	04.23	04.28	04.32	04.36	04.41	04.47
Open circuit voltage (Voc), V	76.18	76.45	76.50	76.57	91.72	91.81	91.93	91.98	92.04	92.08
Short circuit current (Isc), A	04.63	04.68	04.75	04.78	04.50	04.65	04.69	04.72	04.76	04.82
Module efficiency (%)	16.19	16.49	16.78	17.08	16.17	16.42	16.68	16.93	17.18	17.44
NOCT (Wp) at 45 ± 2 °C @800 W/m²	**270**	**275**	**280**	**285**	**320**	**325**	**330**	**335**	**340**	**345**
Pmax (W)	200.94	204.66	208.38	212.10	238.15	241.88	245.60	249.32	253.03	256.75
Max. power voltage (Vmp), V	57.87	58.02	58.12	58.20	69.62	69.98	70.25	70.35	70.55	70.65
Max. power current (Imp), A	03.48	03.53	03.58	03.64	03.44	03.48	03.52	03.55	03.58	03.63
Open circuit voltage (Voc), V	70.83	71.08	71.13	71.19	85.28	85.37	85.48	84.81	85.58	85.61
Short circuit current (Isc), A	03.78	03.82	03.85	03.90	03.67	03.80	03.83	03.86	03.88	03.93

Mechanical Characteristics	Prime & X-Prime
Cable	No. 12 AWG, 4mm²
PV Connectors	MC4 Connectors / MC4 Compatible
Frame	Anodized Aluminum Alloy
Junction box	Prime: IP67 Split Junction box X-Prime: IP67 Junction box with 4 rail X 2 Nos.
Glass	3.2mm Thick low iron tempered

Operating Conditions	Prime & X-Prime
Ambient temperature, °C	-40 to +85
Max. system voltage, Vdc	1000
Hail impact velocity, m/sec	23
Max. surface load capacity, Pa	5400
Max. wind speed capacity, Pa	2400

Cell Temperature Coefficient	Prime & X-Prime
Open circuit voltage	-0.30 % / °C
Short circuit current	+0.05 % / °C
Nominal power	-0.40 % / °C

Physical Parameters	Prime	X-Prime
No. of cells	120	144
Module dimension (mm)	1025 X 1627 (± 2)	1021 X 1938 (± 2)
Module thickness (mm)	40 or 35	40 or 35
Approximate weight (kg)	18.5 or 18.2	21.5 or 21.2

Packaging Configuration	Prime	X-Prime
No. of Modules/pallet	27 or 29	27 or 29

Module Dimension Diagrams (mm)

Prime

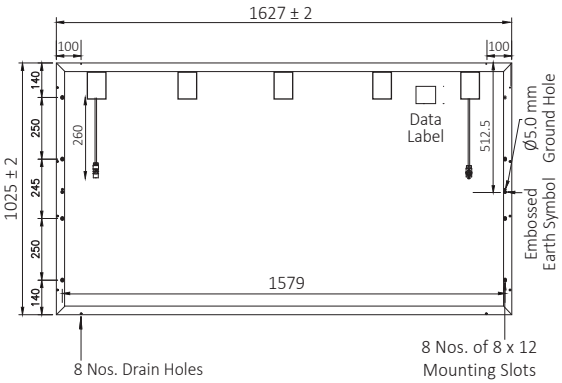

X-Prime

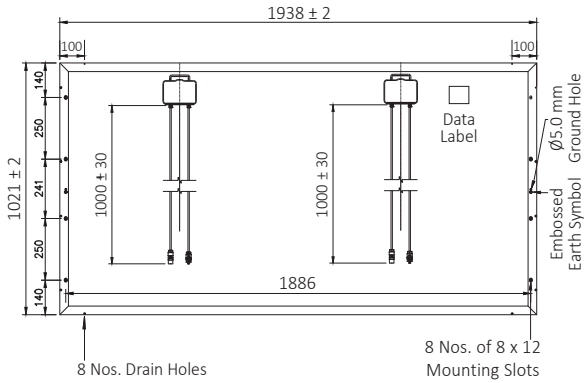

*Cable length may vary based on requirements

*Due to continuous product updation, specifications may change without notice. Kindly refer to the website for latest information: www.renewsysworld.com